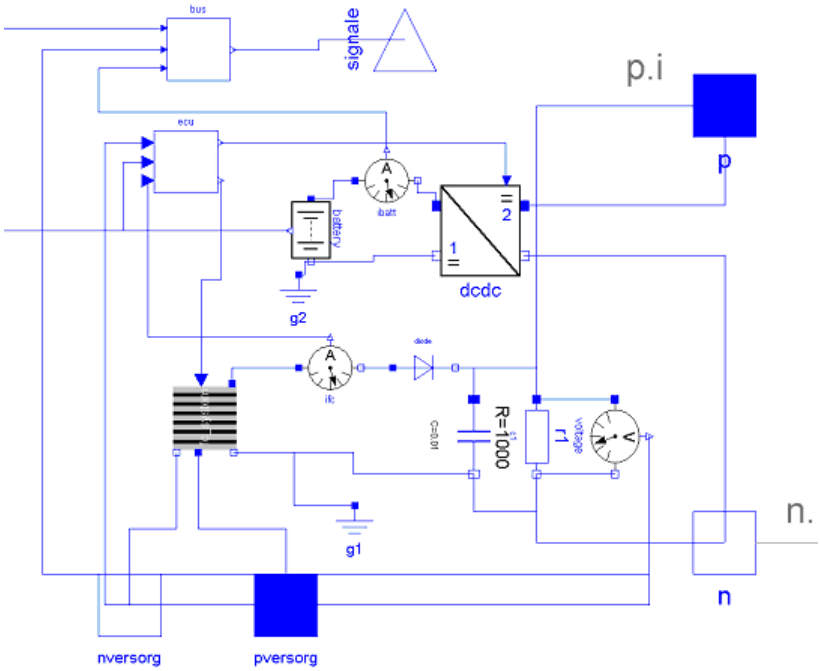

Fig. 2: Object diagram of the object dcsupply (see Fig. 1)

Fig. 2 shows the detailed object diagram of the object dcsupply. It consists of own e.g. battery, fuel cell system models and elements of the Modelica electric standard library as well. In the presentation an overview about the structures of the self-created libraries will be given. This includes libraries for driver models, drive cycle, control units, power electronics, batteries, fuel cells and fuel cell sub systems.

The successful application of Modelica on vehicle level is underlined by some exemplary calculation results. Table 1 shows the consumed energy of a vehicle with the following main parameters (mass approx. 1200 to 1300 kg, depends on degree of hybridisation; $cw * A = 0.6$; rolling resistance = 0.01). By parameterisation of the vehicle model three different architectures of a fuel cell vehicle have been generated:

1. Fuel Cell Vehicle, i.e. vehicle with a fuel cell solely to supply energy for propulsion

2. Fuel Cell Vehicle + Booster battery, i.e. a vehicle with high power fuel cell and relatively low power battery to recover brake energy and provide additional peak power

3. Fuel cell as battery loader, i.e. high power battery and low power battery, i.e. fuel cell is mainly used as a battery loader

Degree of hybridisation	Operation Strategy	m_{H2t}/kg	ΔDOD_{Batt}	Cons. Energy (MJ/km)	Corr. Cons.. (MJ/km)
Fuel Cell Vehicle	#1	0.797	0	1.5725	1.5725
	#2	0.838	0	1.6538	1.6538
	#3	0.887	0	1.7507	1.7507
Fuel Cell Vehicle + Booster Battery	#1	0.559	-0.071	1.0998	**1.0901**
	#2	0.581	-0.051	1.1654	1.1501
	#3	0.609	-0.0326	1.2215	1.2120
Fuel Cell as a battery loader	#1	0.482	0.1165	0.9754	1.1696
	#2	0.486	0.1303	0.9835	1.2007
	#3	0.492	0.144	0.9949	1.2349

Table 2: Calculation results of the simulation runs

The operation strategy reflects the control strategy of the fuel cell system. Operation strategy #1 minimizes the auxiliary energy consumed to operate the fuel cell system. The results show that from the point of energy efficiency the architecture Fuel cell vehicle + Booster battery combined with operation strategy #1 is the most energy efficient. The results show also clearly that the energy consumption of vehicle without battery suffers from the lack of energy recovery. The final part of the presentation covers the most detailed modeling level, i.e. the sub systems of the fuel cell system. The fuel cell system (see Fig. 2) can be separated into different sub systems, e.g.:

- Air supply sub system
- Fuel processing
- Thermal management
- Control sub system

These sub systems consist of hydraulic and thermal components like pipes, fans, compressors, valves, heat exchanger, tanks, reactor, etc.. Fig. 3 shows an object diagram of a thermal circuit as example. We have started to develop these libraries before the thermal library of Modelica has been released. Developing the libraries we faced problems to achieve robust models especially for the description of non-linear pressure drop characteristics. In the presentation we will explain the difficulties we have faced and give some solutions we found so far.

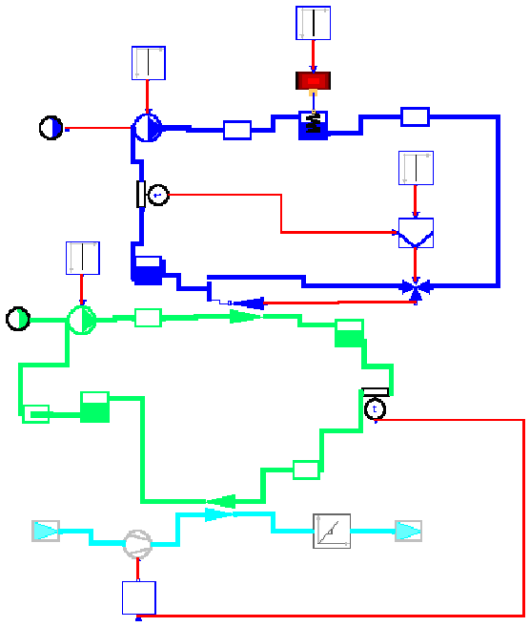

Fig. 3: Object diagram of a thermal circuit.

References

[1] Treffinger, P., Brinner, A: Energy Management of Fuel Cell powered drive trains, Electronics in cars, Baden-Baden, September 2001